Storing

Silo Systems, Material Containers,
Big Bag Stations and more...

Labotek
Power in Plastics

Outdoor Storing

Labotek Silo systems

Labotek silos systems are tailor made to suit the customer application. Outdoor silos are available in aluminium or stainless steel execution. The extensive delivery programme enables Labotek to support most customer requirements. All silo data may be monitored through our standard control options.

Silos dimensions

Ø = 2400 mm	m³	h	H
SL-037-2400-XX-90-AL	37	8200	10000
SL-050-2400-XX-90-AL	50	10700	12500
SL-055-2400-XX-90-AL	55	11950	13750
SL-061-2400-XX-90-AL	61	13200	15000
SL-072-2400-XX-90-AL	72	15700	17500

Ø = 3000 mm	m³	h	H
SL-040-3000-XX-90-AL	40	5300	7500
SL-049-3000-XX-90-AL	49	6550	8750
SL-058-3000-XX-90-AL	58	7800	10000
SL-067-3000-XX-90-AL	67	8850	11250
SL-076-3000-XX-90-AL	76	10300	12500
SL-085-3000-XX-90-AL	85	11550	13750
SL-093-3000-XX-90-AL	93	12800	15000
SL-102-3000-XX-90-AL	102	14050	16250
SL-111-3000-XX-90-AL	111	15100	17500
SL-120-3000-XX-90-AL	120	16550	18750
SL-129-3000-XX-90-AL	129	17600	20000

Ø = 3500 mm	m³	h	H
SL-054-3500-XX-90-AL	54	5100	7500
SL-066-3500-XX-90-AL	66	6350	8750
SL-078-3500-XX-90-AL	78	7600	10000
SL-090-3500-XX-90-AL	90	8850	11250
SL-102-3500-XX-90-AL	102	10100	12500
SL-114-3500-XX-90-AL	114	11350	13750
SL-126-3500-XX-90-AL	126	12600	15000
SL-138-3500-XX-90-AL	138	13850	16250
SL-150-3500-XX-90-AL	150	15100	17500
SL-162-3500-XX-90-AL	162	16350	18750
SL-174-3500-XX-90-AL	174	17600	20000
SL-186-3500-XX-90-AL	186	18850	21250
SL-198-3500-XX-90-AL	198	20100	22500
SL-210-3500-XX-90-AL	210	21350	23750
SL-222-3500-XX-90-AL	222	22600	25000

Ø = 4200 mm	m³	h	H
SL-110-4200-XX-90-AL	110	7300	10000
SL-128-4200-XX-90-AL	128	8550	11250
SL-145-4200-XX-90-AL	145	9800	12500
SL-162-4200-XX-90-AL	162	11050	13750
SL-180-4200-XX-90-AL	180	12300	15000
SL-197-4200-XX-90-AL	197	13550	16250
SL-214-4200-XX-90-AL	214	14800	17500
SL-232-4200-XX-90-AL	232	16050	18750
SL-249-4200-XX-90-AL	249	17300	20000
SL-266-4200-XX-90-AL	266	18550	21250
SL-283-4200-XX-90-AL	283	19800	22500
SL-301-4200-XX-90-AL	301	21050	23750
SL-318-4200-XX-90-AL	318	22300	25000

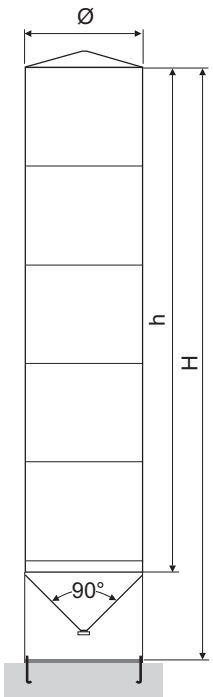

Example of integration of silos into Labotek Labo-Net control system, (please refer to separate literature for further details).

Indoor Storing

Labotek indoor silos

Labotek square indoor silos are modular and made from premium galvanized steel sheets. The construction is bolted together is therefore shipped flat packed, saving freight volume. Furthermore the indoor silos may be extended if future storing capacity demand is rising. The silos are supplied with Labotek standard catch box and cut out in lid for Labotek vacuum receiver. The silos may also be supplied with filter bag and 4” stainless steel fill pipe for pressure conveying from bulk truck or Labotek pressurized silo fill system.

Silos may also be supplied with level sensors or load cell system, connected into centralized control system.

Labotek has a storing solution for any requirement, please consult our staff for further details.

Type	Dimensions	Height [m]	Contents [t]*	Cone angle [cm]
100	105 x 105	1.27 - 5.04	0.09 - 2.2	45° / 60°
125	130 x 130	1.39 - 6.04	0.1 - 4.5	45° / 60°
150	155 x 155	1.57 - 5.34	0.3 - 5.3	45° / 60°
200	205 x 205	1.80 - 10.88	0.7 - 26.6	45° / 60°
250	255 x 255	2.05 - 12.02	1.5 - 45.6	45° / 60°
300	300 x 300	2.05 - 13.03	2.6 - 59.6	45° / 60°

*) Based on a density of 650 kg/m³

Pressure Conveying

Pressure conveying station is the flexible way of discharging 25 kg or bigbags into either outdoor or indoor silos.

Big bag & octabin emptying stations

Labotek bulk bag emptying stations are made as a flexible design to adapt several sizes of big bags. The upper frame is adjustable, the material chute is made from stainless steel AISI 304 and is available with 2 or 4 outlets. The inspection door ensures safe and simple handling of the big bag during opening of a new big bag.

Labotek octabine stands are designed for standard pallet size octabins, the discharge station is adjustable in height to accept to the desired length of inner liner. Material contact points are made from stainless steel AISI 304 and may be supplied with manual or pneumatically operated slide valve and catchbox.

LT no.	Type	W	H	D
205892	Big-Bag 2 outlets Ø 50	1150	2500	1260
207514	Big-Bag 4 outlets Ø 50	1150	2500	1260
753359	Octabine stand	1250	1325	1370

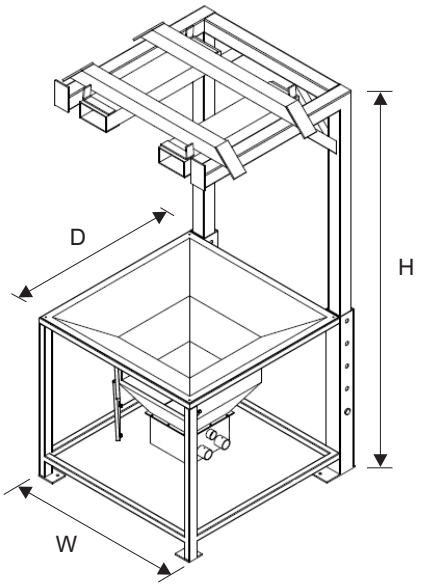

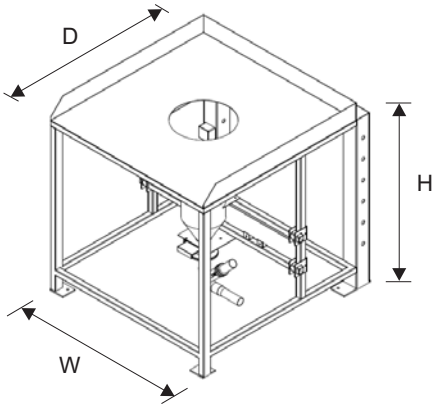

Example standard big bag stand

Example standard octabin stand

Labotek

Material containers

Rectangular containers

5 standard sizes, in the range from 150 to 1400 litres.
Made entirely from Stainless Steel Aisi 304.

Flexible

- Can be moved with fork lift
- Available with wheels - optional
- Grid for bag empty - option

Standard supply

- 3 connections for suction pipe
- Outlet shutter
- Hinged lid with shutter
- Oblong inspection glass

Type	150	300	600	900	1400
A: Width	800	800	1236	806	1625
B: Height	715	1086	1086	1343	1169
C: Depth	800	600	804	1234	1213
LT no.	205474	205475	205476	205477	205778

All dimensions in mm

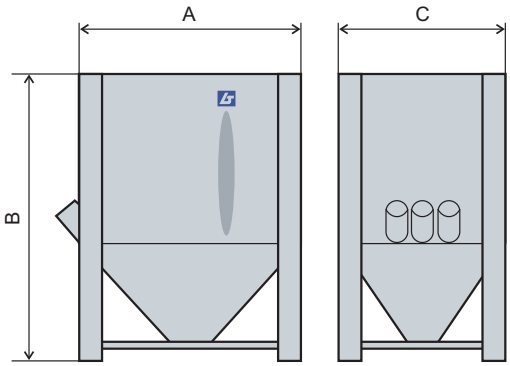

Round mobile containers

A new series of round stainless steel mobile hoppers is available in two sizes 120 & 220 litres. The bins are as standard supplied with plastic cover, however may be fitted with optional metal cover with cutout for Labotek SVR 4-50. Frame is painted in RAL 9005 Black. The mobile hopper is supplied as an assembly kit, in order to save freight cost.

LT no.	Description	Size
208402	Mobile hopper 120 litres S/S	Ø 630 x H 754 mm
208403	Mobile hopper 220 litres S/S	Ø 630 x H 1039 mm
208404	Catchbox 1 outlet*	-
208405	Catchbox 2 outlets*	-
208406	Suction probe	Ø 38*
208407	Suction probe	Ø 50*

*) Only with 208402 / 208403

Example 120 L with optional cover for vacuum receiver

Labotek
Power in Plastics

Labotek offers 3 years warranty
- excluding wear parts

Labotek A/S
Stroebjergvej 29
DK-3600 Frederikssund

+45 4821 8411
info@labotek.dk
www.labotek.com

Representive

The specifications in this document are subject to change without notice.